Competition Regulations

These regulations apply to all classes unless otherwise noted in supplementary regulations. Unless the class requirement or safety regulations specifically state that a modification or optional equipment is permitted, it will not be allowed. SCORE's intent when prescribing specifications for safety equipment for vehicles that will compete under SCORE rules is to provide adequate protection to all entrants and spectators. SCORE does not intend to restrict the general or specific design of any vehicle or the development of competitive vehicles, but does wish to encourage all entrants to give full attention to safety requirements.

Any deviation from the general rules at any SCORE promoted or sanctioned event will be contingent upon the approval of SCORE in writing in advance of the event.

When operating vehicles on the race course, at any time, including pre-running and testing, entrants must wear an approved helmet, head and neck restraint (four-wheel vehicles), safety harness, protective clothing, eye protection, and safety equipment. All safety harness, window nets and vehicle body components must be properly secured at all times when vehicle is in motion.

SAFETY EQUIPMENT

Effective May 1, 2017
Head and Neck Restraints will be required for all drivers and co-drivers of four-wheel vehicles competing in all SCORE events. Devices must be presented along with helmets and driving suits at technical inspection for each event.
All head and neck restraints must meet
SFI Foundation Specification 38.1 standard and FIA 8858-2010 standard.

CR 1 HELMETS

Helmets used in four-wheel vehicles must meet the following requirements; Snell memorial foundation, SA2005, SA2010, SA2015, with a legible Snell sticker attached, FIA Standard 8860-2004, with a legible FIA sticker attached. Motorcycle and Quads must meet the following requirements; Snell memorial foundation, M2005, M2010 or M2015, with a legible Snell sticker attached, FIA Standard 8860-2004, with a legible FIA sticker attached, or BSI 6658 Type A. Helmets with E11 or E12 stamped on chinstrap are also approved. Left hand side of helmet is for SCORE official helmet sticker. Straps must have "D" rings, no snaps. Helmets must be free of any defects.

CR 2 PROTECTIVE CLOTHING

Four-wheel Vehicles

Driving suits are required that effectively cover the body from the neck to the ankles and wrist. Suits must be manufactured from fire resistant material with the manufacturer's fire resistant label attached.

ONE PIECE DRIVING SUITS ARE MANDATORY. Drivers suits must be in good condition and free of damage (*i.e. holes, tears, rips, etc.*) Driving gloves are recommended and must be made out of leather and/or other fire resistant material containing no holes.

A 2" high by 4" long area on the upper left chest area of the driving suit must remain open for SCORE's use. SCORE will designate at the start of each new season what patches will be placed in this area.

Motorcycles and Quads

Helmets (see CR1 above), full-length boots, gloves, goggles, shoulder pads, chest protectors, and padded trousers are minimum required protective gear.

CR 3 EYE PROTECTION and DENTURES

Shatter resistant eye protection is required for all occupants competing in/on vehicles without full windshields. Those competing in closed cockpit vehicles must have eye protection available in the event the windshield is knocked out or broken.

It is highly recommended that entrants with removable dentures remove them prior to competing in an off-road event.

© 2017 SCORE International All Rights Reserved

CR 4 FIRST AID KIT

Four-wheel Vehicles and Chase Vehicles

A suitable, weatherproof, emergency kit composed of individually packaged units must be carried in each vehicle. Each individual unit must contain at least the following items:

- (1) 4" Bandage Compress
- (1) 2" Bandage Compress
- (1) Triangular Bandage
- (8) 2" x 3" Adhesive Pads
- (16) 1" x 3.375" Adhesive Bandages
- (10) Prep Pads Treated
- (1) Eye Dressing Packet
- (10) Ammonia Inhalants
- (1) Ace Bandage

Motorcycles and Quads

Each rider must carry a suitable, weatherproof, emergency kit composed of individually packaged units. Each individual unit must contain at least the following items:

- (1) 4" Bandage Compress
- (1) Eye Dressing Packet
- (8) 2" x 3" Adhesive Pads
- (16) 1" x 3.375" Bandages
- (1) 8cc (3 oz) Antiseptic

CR 5 EMERGENCY SIGNALING DEVICES

All vehicles except Motorcycles and Quads must carry a minimum of two (2) fifteen (15) minute phosphorus emergency signaling flares during long course events. Also, all vehicles may be required to carry additional emergency signaling devices for these events.

CR 6 HORNS

It is required that all vehicles except Motorcycles and Quads be equipped with a loud sounding device. Some classes may be required to run additional warning devices at designated events.

CR 7 REFLECTORS

All vehicles must have either two (2) (*four-wheeled Vehicles*) or one (1) (*Motorcycles and Quads*) 2" minimum diameter red reflectors on the rear of the vehicle and/or helmet. LED lights are not reflective and do not fulfill this rule. Some classes may be required to run collision warning transponders at designated events.

CR 8 FIRE SUPPRESSION EQUIPMENT

Each vehicle except Motorcycles and Quads shall have either one of two fire suppression systems.

1.) Two (2) hand-held portable UL approved 2.5 lb. (minimum) ABC rated dry chemical type or halon fire extinguishers equipped with capacity gauge. One extinguisher mounted inside driver compartment within easy reach of occupants. Second extinguisher to be mounted on exterior of vehicle to be easily accessible from outside. **Fire extinguishers must be fully charged.**

2.) Permanently mounted "On-board fire suppressant" may be the inside fire extinguisher, and the other 2.5 lb. fire extinguisher mounted on outside of vehicle. An on-board system should have three (3) nozzles located in these areas. Driving compartment, fuel compartment and engine compartment. Option is a second hand-held fire extinguisher mounted inside driver compartment within easy reach of occupants.

CR 9 SURVIVAL SUPPLIES

All vehicles competing in long course events must carry at least two days of survival supplies and at least one (1) quart of water or other suitable liquid for each vehicle occupant or rider.

SUSPENSION COMPONENTS

CR 10 SHOCK ABSORBERS and BUMP STOPS

At least one shock absorber per wheel, in working condition, must be used on all four-wheel vehicles. Other systems are contingent upon the approval of SCORE.

Suspension bump stops can only be made of rubber, plastic, urethane, etc. Other systems may be used in those class's that have no restrictions on suspension.

© 2017 SCORE International All Rights Reserved

CR 10 SHOCK ABSORBERS and BUMP STOPS - *cont'd*
For classes that have wheel travel limitations the following will apply:

Front wheel travel will be measured at the centerline of the front spindle as the front suspension is stroked through its travel from metal stop to metal stop. Rear wheel travel will be measured at the centerline of the axle as the rear suspension is stroked through its travel from metal stop to metal stop. Stops will be non-removable and non-adjustable. If limiter straps are to be used for stops the bolts that mount them must be drilled so that a SCORE wire seal can be attached.

CR 11 SECONDARY SUSPENSION
Secondary suspension would include leaf springs, torsion bars, coil over shocks, air bags, Haga balls or any other item that changes the wheel rate at any point in its travel other than shocks and the stock suspension system that came with the vehicle.
Air shocks will be considered secondary suspension when charged to 200 PSI in its fully extended state and the static shaft pressure exceeds 300 PSI when fully collapsed.
Bump stops will be considered secondary suspension when they contact the suspension unit more than 4" before the end of its travel. Suspension bump stops can only be made of rubber, plastic, urethane, etc. Other systems may be used in those class's that have no restrictions on suspension.

CR 12 WHEELS and TIRES
Snap-on hubcaps or wheel covers of any type are not permitted on any class of vehicle during competition. Tires will be visually checked for condition and must be considered safe by SCORE prior to competing. It is highly recommended that all paint be removed from the mounting surfaces of the rim and the hub. (*Paint burns, blisters and peels, allowing the lug nuts to loosen.*) Mark wheels and tires for identification if lost. Maximum tire size listed by class. Outside Diameter (O.D.). Pressure checked at 18 PSI on rim to be used.

CR 13 FASTENERS
All nuts, bolts, and component parts on each vehicle's suspension system, chassis and running gear must be secured with Grade 8 or better nuts and bolts and secured with either lock nut, cotter keys or safety wire and have at least one full thread showing through the nut.

STEERING and BRAKE COMPONENTS

CR 14 STEERING
Steering wheel play must be kept to a minimum. Drag link and tie-rod ends must be secured and keyed. All welded parts must be reinforced. If the steering shaft is not a factory production item, then the shaft must be welded, not brazed, to the wheel-mounting flange. Minimum specifications for the shaft are .750" O.D. X .060" wall thickness unless it is an original factory production item. Steering must be considered safe by SCORE before the vehicle will be allowed to compete.

CR 15 BRAKES
Brakes must be in a safe working condition and able to apply adequate braking force to "lock-up" all four wheels. Turning or steering brakes are allowed. ***Brakes are OPEN. Any manufacture disc brakes are allowed.*** *(Rev 5.15.16)*

ELECTRICAL SYSTEM

CR 16 IGNITION
Each vehicle in competition must have a positive action on-off switch in good working order. The switch must be located within easy reach of the driver and marked or labeled **IGNITION ON-OFF**.

CR 17 BATTERIES
Batteries must be securely mounted with metal-to-metal tie-downs. All batteries mounted in the driver's compartment must be fully enclosed including the sides and bottom of the battery. The container must contain the quantity of acid in the battery when inverted. Aircraft batteries which are not covered but located in the driver's compartment are not acceptable. (*Batteries will be considered to be located in the driver's compartment if there is not a full bulkhead (firewall) separating the driver and the battery.*) Regardless of location battery positive terminal must be insulated.

CR 18 LIGHTS

Four-wheel Vehicles
All four-wheel vehicles must have a minimum of two (2) headlights, two (2) brake lights, and two (2) taillights. Taillights must be mounted at least 36" from the ground if other than stock. The brake light must be at least 3" in diameter. All tail lights must be highway legal and in operating condition at all times.

© 2017 SCORE International All Rights Reserved

CR 18 LIGHTS - *cont'd*

All four-wheel vehicles must have a rear facing amber colored light. Amber light must be a least 3" diameter. This light must be connected to the ignition and remain on during the race. Amber light must be seen 180° and not blocked by tires or parts. The bulb must be 25 to 55 watts, or LED with equivalent lumens as long as it has an amber colored lens. The lens must be coated deep amber, (Any other color coated lenses will not be accepted, this includes clear) Light must be mounted at least 48 inches off of the ground. The light must be visible from any position aft of the vehicle and must be protected from damage in case of roll over.

Certain classes, including *all Sportsman 4-wheel classes except quads*, are required to have a rear facing blue colored light in addition to the amber colored light. Size, illumination and mounting specifications same as amber light (above). Refer to specific class information to determine if your vehicle requires this light. *Rule becomes effective July 1, 2017*

Rear facing lights must be in an operational condition before the vehicle will be allowed to start an event. During an event if the light fails it must be fixed or replaced at the next available pit location before proceeding in the race. Any light that is connected to a switch that allows the vehicle to move in any direction without the light being on will cause that entry to be disqualified.

Motorcycles and Quads

All Motorcycles and Quads must also have a minimum of one (1) headlight and one (1) taillight. All lights must be in operating condition at all times. Taillights must be on during the entire race. Tail light must be either powered by the Motorcycle or Quad AC generating system, or be a SCORE approved battery powered unit capable of operating for the entire event.

CR 18-A OFF-ROAD LIGHT OPERATION

At no time must off-road lights be illuminated when there is oncoming traffic. All front facing off-road lights and light bars must be turned off when vehicle is being operated on any section of race course that is on a paved highway or public road. Only two (2) small lights suitable for normal highway driving can be in operation on these highways and roads. Motos and quads require only one (1) light. These highway lights must be connected and operated by a separate auxiliary switch. All front facing off-road lights and light bars must also be turned off when in the 15 mph checkpoint zones. This regulation applies to all trucks, cars, UTVs, motos and quads, and also includes all team and chase vehicles. Violations by any of the above vehicle categories are subject to penalties or possible disqualification from event. *(Effective 5.15.17)*

CR 19 STARTERS

All vehicles except Motorcycles and Quads must have a battery and a starter capable of cranking and starting the engine.

FUEL SYSTEM

CR 20 FUEL

Any of the following commercially available gasoline's, LPG, or diesel fuel may be used.

(1) Service station type pump fuel.
(2) Racing gasoline as manufactured.
(3) Commercial aviation gasoline as manufactured.
(4) Natural or Propane Gas as manufactured.
(5) Commercial available Ethanol i.e. C85 or C95.

All other alternative fuels may be approved on request.
No oxygen bearing fuel including alcohol or nitromethane is allowed.
Commercially produced, nationally advertised fuel additives may be used only in the quantities specified by the manufacturer and only if a sample of the gasoline with the additive is supplied for inspection to SCORE. Fuel samples may be taken at random before, during, and after the event.

CR 21 FUEL TANKS

Safety fuel cells are **required** for all fuel tanks in all classes except Motorcycles, and Quads. Auxiliary fuel tanks may be added to a vehicle in all classes except Class 11. Auxiliary fuel tanks must also be safety fuel cells. All fuel cells must be securely mounted, filled from and vented to the outside of the vehicle, and have a substantial cross-member between the fuel tank and driver in vehicles with rear mounted tanks.

No GI cans or fuel containers similar in construction or purpose will be allowed in/on any vehicle during a race. Safety fuel cells shall consist of a bladder enclosed in a metal (minimum of .060 thickness) container as described on following page.

© 2017 SCORE International All Rights Reserved

CR 21 FUEL TANKS - *cont'd*
Bladders shall be constructed of nylon or Dacron woven fabric impregnated and coated with a fuel resistant elastomer. **Rotary molded polymer cells are not allowed as of January 1, 2011**. The minimum standards acceptable for physical properties are:

Test Type	Minimum Standard	Test Specification
Tensile Strength	450 lbs.	Spec. CCC-T-1916 Method 5102
Tear Strength	50 lbs.	Spec. CC-T-1916 Method 5134
Puncture Test	175 lbs.	Spec. Mil-T-6396 Article 4.5.17

These physical properties must be maintained throughout all areas of the finished bladder including seams, joints and fittings.

Fittings and Connections
All fittings shall be built into the skin and bonded as an integral part of the tank or mechanically bound to the skin by a system of ring and counter ring with sealing by either a flat joint or with an "O" ring.

Container
The bladder shall be fully surrounded in a smooth skinned casing. The container shall be made of .060" Aluminum or steel.
Other materials may be approved on request. Use of magnesium prohibited.
The container must be securely fastened to the frame or floor with bolts and/or steel straps.

Foam
Internal baffling is required in all fuel cells.

CR 22 FUEL FILLER LINES, VENTS, and CAPS
Fuel filler lines and caps must be mounted in a location where they cannot be knocked open or off during movement of the vehicle. All fillers must be located within a line drawn from two extremities of the frame or body structure so as to prevent opening during a roll-over or accidental impact. Fuel pick-up openings, lines, breather vents, and fuel filler lines shall be designed and installed so that if the car is partially or totally inverted fuel shall not escape. Fuel breather lines must have a check valve and in addition the line must make a loop around the fuel cell. Fuel tank breathers must be vented outside the driver's compartment.

All fuel fillers attached to the frame or body must have a flexible coupling to the tank. Positive locking non-vented fuel filler caps (*no Monza/flip type*) are required. If the fuel filler cap is located directly on the fuel tank a check valve is not required. If the fuel filler cap is not located directly on the fuel tank (*I.E. within 2 in.*), a check valve must be incorporated in the fuel tank to prevent fuel escaping if the cap and filler neck are torn from the tank. It is recommended that all lines, filler openings, and vents be incorporated in a single fitting located at the top of the fuel tank.

All fuel fillers must be surrounded at the outer extremity with a splash guard or boot designed to direct spilled fuel to the outside of the vehicle away from the driver, engine, and exhaust system when fueling. A body panel is acceptable as a splashguard if the fuel filler penetration is sealed.

ENGINES, TRANSMISSIONS and DRIVELINES

CR 23 ENGINE and ENGINE DISPLACEMENT
Where applicable, engines must displace no more than specified, and SCORE may check engine displacement and location. In classes that require stock fuel injection, this will require the use of stock intake manifold and throttle body for the motor for which it is attached. Computer and injectors are open.

CR 24 ENGINE REPLACEMENT
No vehicle including Motorcycles and Quads may replace a complete engine during an event. (*Closed course events excepted.*) Motorcycle and Quad engine cases are considered to be engine blocks and may not be replaced, although internal parts (*gear, clutches, etc.*) may be replaced. SCORE may mark engine blocks and/or cases.

CR 25 TRANSMISSION
Every vehicle in competition except Motorcycles and Quads must have a functional reverse. Four-wheel drive vehicles must be capable of being driven through the front wheels.

© 2017 SCORE International All Rights Reserved

CR 26 THROTTLES

Each vehicle except Motorcycles and Quads must have a foot throttle incorporating two (2) positive action return springs attached directly to the carburetor throttle arm and must register a minimum pull of two (2) pounds each. A positive stop or over-ride prevention system must be used to keep linkage from passing over center and sticking in an open position.

CR 27 EXHAUST

Each vehicle, regardless of class, may be required to be equipped with mufflers or forestry approved spark arrestor. Exhaust system must be installed in such a manner as to direct the exhaust gases out of the body, rearward, behind the driver, away from the fuel tanks and tires, and placed in such a manner that will minimize the producing of dust. Exhaust pipes must extend at least to the rear of the driver's compartment.

CR 28 DRIVE SHAFTS

All front engine vehicles utilizing open drive shafts must have a retainer hoop securely mounted and located within 6" of the front universal joint. Four-wheel drive vehicles are not required to restrain the front driveshaft from the transfer case to the differential.

The retainer hoop may consist of either a .25" x 2" steel strap, 2" wide nylon webbing, or .750 diameter tubing, and must be securely attached to a body or frame member.

CR 29 FLYWHEEL SHIELDS

All front engine vehicles with standard transmissions and solid lifters must have a SEMA-approved bell housing or cover.

CR 30 FLUID COOLERS

Oil coolers, transmission coolers, and radiators mounted ahead of the driver or in the passenger compartment must have a shroud behind the cooler that will prevent liquids from the cooler or its lines from blowing back onto the driver or co-driver. All hoses that run through the passenger compartment must be shielded as well.

CR 31 AUXILIARY EQUIPMENT

A generator, fan, water pump (*water-cooled engines*), and a complete functional electrical system must be connected and in operation at all times. Drive belts must be sufficiently tight to drive equipment in a satisfactory manner and without noticeable slippage. Thermostatically controlled accessory fans are allowed. Auxiliary equipment for certain classes may be waived during closed course events, however vehicles must have functional and working taillights.

CR 32 SUPERCHARGERS and TURBOCHARGERS

Superchargers and turbochargers are only allowed in those classes noted. Diesel engines in stock classes which utilize stock turbochargers may be approved on an individual basis.

VEHICLE SAFETY EQUIPMENT

CR 33 ROLL CAGES

All vehicles in competition except Motorcycles and Quads must be equipped with a roll cage. Minimum design and tubing size based on seamless 4130 chromoly tubing or ASTM 1018/1026 CDS/DOM. No aluminum or other non-ferrous material permitted.

Material

Material for roll cage construction must be 4130 chromoly tubing or ASTM 1018/1026 CDS/DOM.

All welding must be of the highest quality with full penetration and no undercutting of the parent metal. All welds shall conform to the American Welding Society D1.1, Structural Welding Code, Chapter 10, Tubular Structures and Standards for the material used (see AWS. Org). It is strongly recommended that the welder inspect all welds using Magnaflux®, dye-penetrant, or other effective methods.

All tubes must be welded 360-degrees around the circumference of the tube.

No oxy-acetylene brazing or welding allowed. Good external appearance of a weld does not necessarily guarantee its quality, poor looking welds are never a sign of good workmanship.

None of the tubing may show any signs of crimping or wall failure. All bends must be mandrel type. The center radius of the bends may not be less than three (3) times the outside diameter of the roll cage tubing. It must be emphasized that the use of heat-treated or high carbon steels may cause problems and that bad fabrication may result in a decrease in strength (caused by brittle heat-affected zones), inadequate ductility and internal stress.

© 2017 SCORE International All Rights Reserved

Roll Cage Tubing Size Specifications

For the purposes of determining roll bar tubing sizes, vehicle weight is as raced, as sitting on the starting line, but without fuel and driver. Note: There is an allowance of minus 0.010 inches on all tubing thicknesses. Minimum tubing size for the roll cage is:

Up to 2000 lbs. 1.500” x 0.095” CDN/4130/Seamless or ASTM 1018/1026 CDS/DOM
2001 - 2500 lbs. **1.500” x 0.120” CDN/4130/Seamless or ASTM 1018/1026 CDS/DOM**
2501 - 3000 lbs. 1.750” x 0.095” CDN/4130/Seamless or ASTM 1018/1026 CDS/DOM
3001 - 4000 lbs. 1.750” x .120” CDN/4130/Seamless or ASTM 1018/1026 CDS/DOM
Over 4000 lbs. 2.000” x 0.120” CDN/4130/Seamless or ASTM 1018/1026 CDS/DOM

Construction Procedures

Cages must be securely mounted to the frame or body and gusseted and braced at all points of intersection. Cab or body mounted cages must not be attached to the body structure by direct welding, but must be bolted through and attached by the use of double plates (one on either side) with a minimum thickness of .187”, see Figure 4. Where bolt and nuts are used the bolts shall be at least .375” diameter SAE Grade 8 or equivalent. Roll cage terminal ends must be located to a frame or body structure that will support maximum impact and not shear.

Minimum material dimension requirements for roll cages apply to the following members of the roll cage:

(1) Front and rear hoop
(2) Front and rear interconnecting bars
(3) Rear down braces
(4) Lateral bracing
(5) Elbow and door bars
(6) Lower A-pillar tubes, and lower B-pillar tubes

Roll Cage Design

All roll cages must be constructed with at least one (1) front hoop (top of cage to floor), one (1) rear hoop (top of cage to floor), or two (2) lateral hoops, two (2) interconnecting top bars, two (2) rear down braces and one (1) diagonal brace and necessary gussets, see Figure 1. If front and/or rear hoop terminate at elbow/door bar, lower A-pillar and/or B-pillar must be made of same tubing size as roll cage. Upper main, front, rear, and lateral roll bar hoops must be made in one piece without joints. Centerlines of all required tubes must converge at intersections.

Any vehicle that is not provided with stock steel doors for its driver and co-driver must be equipped with sidebars, at least one on each side that will protect the occupants from the side. These bars must be parallel to the ground (or as close to parallel as is practical) and be located vertically in relation to the occupants to provide maximum protection without causing undue difficulty in entering or exiting the vehicle. The sidebars must be formed of tubing of the same material and dimensions as the roll cage itself and must be securely attached to the cage’s front and rear members. Additional side tubes may be required to limit cockpit intrusion; these additional tubes must be of the same size tubing as the roll cage. Tubes must be placed in such a manner as to limit openings adjacent to the occupants. Maximum opening size in this area is limited to 370 square inches.

© 2017 SCORE International All Rights Reserved

Roll Cage Design - *cont'd*

All roll cage bars must be at least 3" in any direction from the driver and co-driver's helmets while they are in their normal driving positions.

Gussets must be installed at all main intersections on the main cage including diagonal and rear down braces, and where single weld fractures can affect driver's safety. Gussets may be constructed of .125" X 3" X 3" flat plate, split, formed and welded corner tubing, or tubing gussets the same thickness as the main cage material, see **Figure 2** and **Figure 3**. Rear down braces and diagonal braces must angle no less than 30 degrees from vertical.

An inspection hole of at least .187" diameter must be drilled in a non-critical area of the roll bar hoop to facilitate verification of wall thickness maybe required.

Any cage or chassis that has been built after January 1, 2006 must be identified by means of an identification plate affixed to it by the manufacturer; this identification plate must be neither copied nor moved (i.e. embedded, engraved or self-destroying sticker). The identification plate must bear the name of the manufacturer, a serial number, and the date of manufacturer.

Headrests designed to prevent whiplash are required on all vehicles. These headrests must a minimum of approximately 36 square inches, with a resilient padding at least 2" thick. Any portion of the roll bar or bracing which might come in contact with the helmet must be padded.

Roll Cage and Annual Vehicle Inspection

All vehicles must have their cages approved prior to racing in an SCORE event. Contact the SCORE Technical office to arrange this annual inspection. After passing inspection and paying Inspection fees all vehicles will receive an SCORE I.D. tag, that is to remain with the vehicle at all times. If tag is removed or lost vehicle must be re-inspected and retagged. Any modification to an approved cage may render its approval invalid, and may need to be re-approved. All repairs to a roll cage damaged after an accident must be re-approved by SCORE International. **Cage must be inspected annually from the date it was first inspected.** Vehicle can only compete in the class that it is tagged for.

Illustrations below show typical roll cage design and gusseting details. For additional questions and comments, contact SCORE Director.

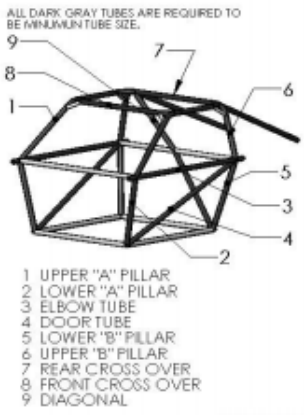

Figure 1: Roll Cage



: Corner of Main Hoop Intersection showing Gussets

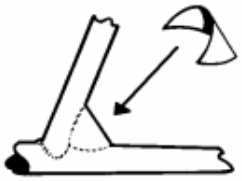

Figure 3: Front Lower Hoop Intersection showing Gusset

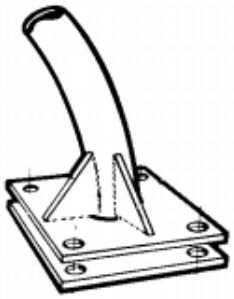

Figure 4: Mounting of Roll Cage showing use of Doubler Plates. Note use of Gussets under the Curve and off to the Side.

© 2017 SCORE International All Rights Reserved

CR 34 SAFETY HARNESS

All safety harnesses must meet SFI Foundation Specification 16.1 or 16.5. These SFI Specifications allow 2" belts in any position. All vehicles except Motorcycles and Quads must have a heavy-duty type five-point fast release (*no push button or quick release type*) seat belt and shoulder harness with metal-to-metal buckles and connectors for each occupant. The five-point system consists of a seat belt, an anti-submarine belt, and two shoulder straps. *(Rev. 5.10.17)*

The single anti-submarine strap of the five-point system shall be attached to the floor structure as close to the front of the seat as practical so that it will exert maximum restraint to the upward movement of the belt and harness, see Figure 5 and Figure 6. No "Y" type shoulder belts are allowed. All belts must show manufacturer's name, month, and year of manufacture. All belts must be replaced after two (2) years from date of manufacture. SCORE recommends all belts be changed after one (1) year of use. No surplus safety harnesses are allowed.

Harness materials shall be nylon or Dacron polyester and in new or perfect condition with no cuts or frayed layers, chemical stains, or excessive dirt.

Shoulder harness should be mounted behind the driver/co-driver. The recommended mounting point is approximately 4" below top of shoulder. Lap belts should be kept at a minimum at least 2.5" forward of seat and backrest intersection, see Figure 5 and Figure 6. All belts must be mounted directly to a main structure member of the same size specification as the roll cage and with gussets.

All adjustment buckles should be kept at a minimum distance of 1.5" from the seat to prevent accidental loosening or chafing. Mounting hardware must utilize at least .312" hardened steel bolts with 1.5" diameter washers attached through body or frame using lock nuts or cotter key. All belt hardware must be safety tied.

Where slip buckles (*"E" rings*) are used, they must be doubled up. Example two (2) slip rings per connection.

IMPORTANT! Do not allow adjustment buckles to ride on seat. Maintain minimum of 1.5" clearance between seat and buckles.

SAFETY HARNESSES must be worn by driver and co-driver at all times during pre-running and race while in vehicle.



Figure 5: Safety Harness Mounting showing Correct Shoulder, Lap, and Crotch Strap Locations.

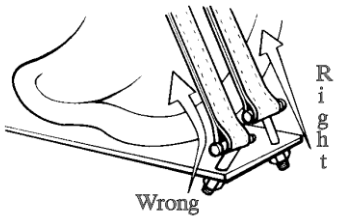

Figure 6: Safety Harness Mounting Hardware showing Correct Angle that will Sustain Maximum Load.

CR 35 SAFETY NETS

Safety nets are mandatory on all vehicles except Motorcycles and Quads and must cover the complete open area of both the side and top of all vehicles. The net must be fastened every 6 to 8 inches around the outside of the net. Vehicles with wing glasses that open fully must cover the area surrounding the wing glass. Arm restraints will be allowed but must be in addition to the required safety nets. Fixed corners must be fastened with metal fasteners i.e. hose clamps, bolts etc. The net border or edge and tie downs shall be made of materials that are as strong or stronger than the netting itself. Acceptable methods of tying the nets into the vehicle include, but are not limited to: hose clamps, snaps, nylon ties, Velcro, lift-a-dot, metal hooks and steel rods, see Figure 7, Figure 8, and Figure 9.

Full-length Velcro or steel rods are acceptable fastening devices for the bottom of the net. Velcro must fasten continuously along the bottom of the roll cage bars to prevent accidental unfastening from a direct pull. Velcro installations should be carefully checked because they tend to loosen when packed with dirt or dust or other debris.

Nets shall be installed so that the driver and/or co-driver can release the netting and exit the vehicle unassisted regardless of vehicle position.

© 2017 SCORE International All Rights Reserved

CR 35 SAFETY NETS - *cont'd*

Netting must be installed on the inside of the roll cage bars so that it will not be damaged or come off the car in the event of a roll-over or slide on the side. Nets attached to the door frame covering the entire opening are approved as long as the door is equipped with a secondary latching device.
The roof shall also be covered with sheet metal or sheet aluminum (minimum thickness .080 inch) covering all areas.

It is required that the occupant(s) must be protected in such a manner that prevents them from extending from the body or frame of the vehicle during a roll-over.

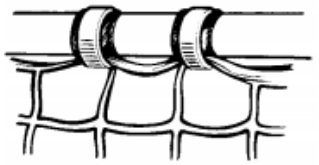

Figure 7: Safety Net Installation using Hose Clamps

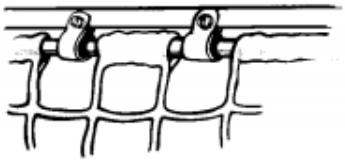

Figure 8: Safety Net Installation using Electrical Wiring Clips Secured with Metal Screws



Figure 9: Safety Net Installation showing Hose Clamp Screw to the inside

CR 36 SEATING
All seats must be manufactured as a racing seat and approved by SCORE Tech. Seats must be properly reinforced and securely mounted. Adjustable track type seats must be securely fastened so as to allow no vertical or lateral motion. If stock VW type seat runners are used, they must be clamped to the floor with a minimum of two (2) U-bolts per rail and have 1" diameter washers on the underside.

GENERAL VEHICLE COMPONENTS

CR 37 DRIVER'S COMPARTMENT
Driver and/or co-driver must be able to enter and exit the driving compartment unassisted with ease, with the vehicle in any position. The driving compartment must be separated by firewalls or bulkheads from any acids or fuels. The roof shall also be covered with sheet metal or sheet aluminum (minimum thickness .080 inch) covering all areas.

CR 38 DOORS and LATCHES
All vehicles with operable doors must have positive locking mechanisms, (*stock handle and latch, quick release pins, pin and clips, etc.*) and must have a secondary latching device.

CR 39 FIREWALLS
All vehicles in competition except Motorcycles and Quads must utilize an all-metal firewall to separate the driver's compartment from any danger of fire from the engine and any fuel supplies. A minimum firewall must extend from the driver's shoulder height to the vehicle floor and body sides and must be fuel tight. If rear mounted safety fuel cell is higher than shoulder height, the firewall must be extended at least one inch above the safety fuel cell. On front engine vehicles the hood is considered an extension of the firewall. Firewall material may be made of 18-gauge sheet metal, stainless steel or aluminum.

CR 40 BALLAST
Any material used for the purpose of adding to the vehicle's total weight must be properly attached as a part of the vehicle's structure. Any material added to make minimum weight requirements must also have holes drilled in material so that it may be sealed to a non-removable structure member.

CR 41 WEIGHT
Weight shall be considered wet weight for closed course and dry weight for long course. (Dry weight is with all fuel tanks drained.) Tools, spare tires, and parts must be removed, but otherwise the vehicle must be race ready including radio and fire extinguishers. Roll cage weight will be as raced, minus fuel, as the vehicle sits on the starting line. Official weight will be considered weight shown on official scales.

CR 42 FLOORBOARDS
Floorboards or belly pans are required on all vehicles and must be held on by a minimum of six (6) .25" bolts per side if the floor is not an integral part of the body or chassis. Floorboards must cover the entire area from the front of the pedal assembly to the back of the seat(s) and from outside edge to outside edge on the sides.

© 2017 SCORE International All Rights Reserved

CR 43 BUMPERS and HAZARDOUS PROTRUSIONS
No hazardous front or rear bumpers, nerf bars, frame heads or other protruding objects from the vehicles are allowed. All ends must be rounded and capped off to prevent becoming locked together with other vehicles. All vehicles except Motorcycles and Quads must be equipped with safe front and rear bumpers.

CR 44 MIRRORS
A rear-view mirror is required on all vehicles except Motorcycles and Quads.

CR 45 SKID PLATES
Skid plates designed to protect the front suspension, steering, and brake components are required on all vehicles except Motorcycles and Quads. Skid plates must be designed of metal and installed so as to prevent accumulation of any fluids.

CR 46 STORAGE
All spare parts and extra equipment carried on/within a vehicle must be securely fastened so as to prevent their movement during a race.

CR 47 FENDERS
On all vehicles required to have fenders, fenders must be securely attached to the vehicle with quick release or breakaway fasteners. The removal of fenders for any reason other than damage incurred during an accident, after the race has officially started, will cause the vehicle to be disqualified.

CR 48 CHASSIS and BODY
All body components shall remain on the vehicle (*accidental damage excepted*) during the entire race. As specified in individual class rules, body/chassis series must be maintained with body/chassis combinations.

CR 49 HOSES
All hoses used for fuel and brake lines including metal lines and fittings must be clamped securely and/or safety wired.

CR 50 IDENTIFICATION MARKINGS
All vehicles in competition must be identified with the correct vehicle number(s). Motos and Quads must display both number and letter. All identification markings (numbers and letters) are issued by SCORE. All vehicles must display the identification markings in the correct locations as prescribed under the correct heading for your vehicle. In addition, all vehicles must leave the appropriate space for SCORE decals and sponsorship decals as SCORE prescribes.

All numbers must be on a contrasting background. (*Glass is considered colorless unless it is painted black or white).* Background or number plates shall be clearly distinguishable from the color of the vehicle. Background or number plates shall be either vinyl or paint.

Any combination of numbers that, in the opinion of SCORE, are difficult to read, in an undesirable location or are inadequately attached will be rejected. The violation must be corrected before the vehicle will be allowed to compete. **SCORE assumes no responsibility for scoring vehicles that have unrecognizable identification numbers. It is the driver's responsibility to keep numbers recognizable at all times during the event.**

Each vehicle in competition shall be required to carry the following identification numbers and/or letters as a minimum requirement:

Four-wheel Vehicles

Competition Number Requirements are as follows:
(A) **Visible from the side** - One (1) number per side on both sides of the vehicle. Numbers must be a minimum of 8" high with a minimum 1" stroke width. Numbers must be located in the center of the vehicle (Top to Bottom) and must be directly in line with the driver and/or co-driver as viewed from the side**. A blank space (4" high by 12" width minimum) directly under the numbers with the same color as the background must be left for SCORE's use.**
(B) **Visible from the rear** - One (1) number. Numbers must be a minimum of 6" high with 1" stroke width.
(C) **Visible from the front** - One (1) number positioned on front of vehicle and visible when entering checkpoints. Numbers must be a minimum of 4" high. Recommend left side of visor, hood or on valance area
(D) **Visible from above (roof)** - One (1) number. Numbers must be a minimum of 8" high with a minimum 1" stroke width.
(E) Any letters used for identification purposes by SCORE in your number may be 1/2 the size of the number.

© 2017 SCORE International All Rights Reserved

CR 50 IDENTIFICATION MARKINGS - *cont'd*

Motorcycles

Competition Number Requirements are as follows:

A) **Visible from the side** - One (1) number and letter per side on both sides of the rear wheel. Numbers must be a minimum of 6" high with a minimum 1" stroke width and attached to a number plate of sufficient size to accommodate them.

B) **Visible from the front** - One (1) number and letter. Numbers must be a minimum of 6" high with a 1" stroke width and attached to a number plate of sufficient size to accommodate them.

C) Any letter assigned by SCORE to be used with your assigned number must be 1/2 the size of the number.

Quads

Competition Number Requirements are as follows:

A) **Visible from the s**ide - One (1) number and letter per side on both sides of the vehicle. Numbers must be a minimum of 6" high with a 1" stroke width and attached to a number plate of sufficient size to accommodate them. **Note: The top of the rear fenders is not considered visible from the side.**

B) **Visible from the front** - One (1) number and letter. Numbers must be a minimum of 6" high with a minimum 1" stroke width and attached to a number plate of sufficient size to accommodate them.

C) **Visible from the back** - One (1) number and letter. Numbers must be a minimum of 6" high with a minimum 1" stroke width and attached to a number plate of sufficient size to accommodate them.

D) Any letter assigned by SCORE to be used with your assigned number must be 1/2 the size of the number.

CR 51 ADVERTISING ON VEHICLES

Advertising, names and symbols may be displayed on vehicles provided they are in good taste and do not interfere with identification marks.

CR 52 RADIO EQUIPMENT

All vehicles, motos and quads are required to have a VHF radio capable of operating on SCORE (Weatherman) race frequency **151.625**. Alternate to VHF radio is satellite phone capable of contacting SCORE Operations.

No radio equipment in any race vehicle or support vehicle is permitted to transmit on any frequency allotted to the amateur radio band, public service band, marine band, aircraft band, and any frequency that the FCC considers illegal. All radio equipment must transmit and receive on frequencies that the equipment was specifically designed for.

No outboard linear amplifiers with an output over 25 watts. An outboard linear amplifier is a device attached between the radio and the antenna that boosts the power of the radio.
General Regulation **GL8** in its entirety is also included in this rule.

CR 53 WORKMANSHIP

All construction, modifications and alterations must be performed in a workmanlike manner contingent upon the approval of SCORE International.

CR 54 TRACKING DEVICE

All vehicles are mandated to run a GPS tracking device at designated events. Tracking device and monitoring company will be designated by SCORE International. Information for tracking devices for each specific event will be in Racer Brief for that event.

© 2017 SCORE International All Rights Reserved